Directions Please fill in the blanks on pages 2 and 3 with dimensions and materials that will be used to build the structure. Please print legibly. On page 3, indicate in the foundation check box which details from page 4 will be used.

FLOOR PLAN

Garage dimensions not to exceed 24' x 36' x 15' total height.

Show door and window headers sizes and location and size of landing in front of door.

NOTE
If roof trusses or rafters bear on header, special header design may be required.

Address:

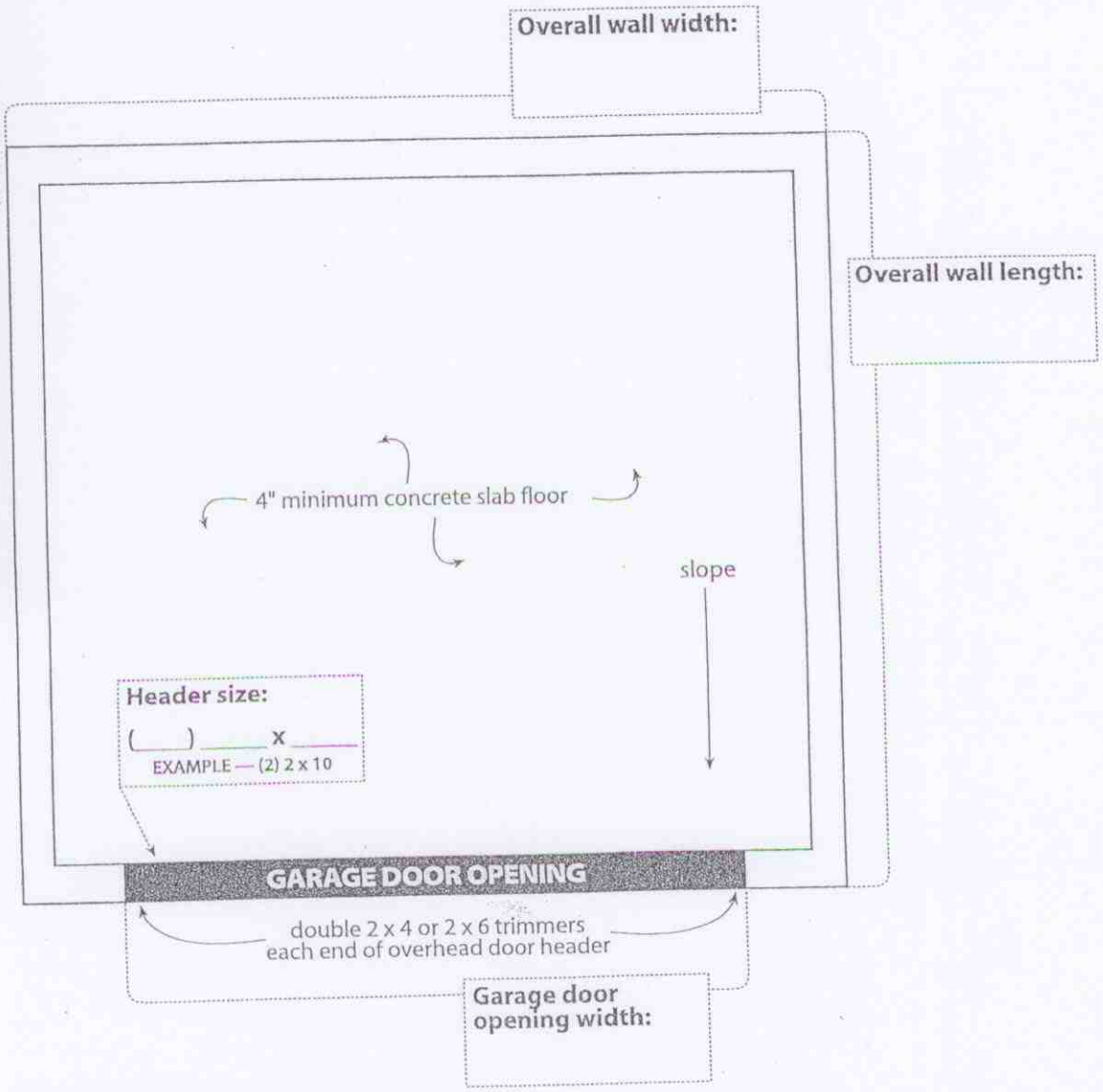

NOTES

BUILDING SECTION

Roof not to exceed 24 foot span

NOTE
Pre-engineered roof trusses with truss clips and hardened nails may be used instead of roof structure shown.

*** If you use pre-engineered roof trusses, you don't need to complete these boxes.**

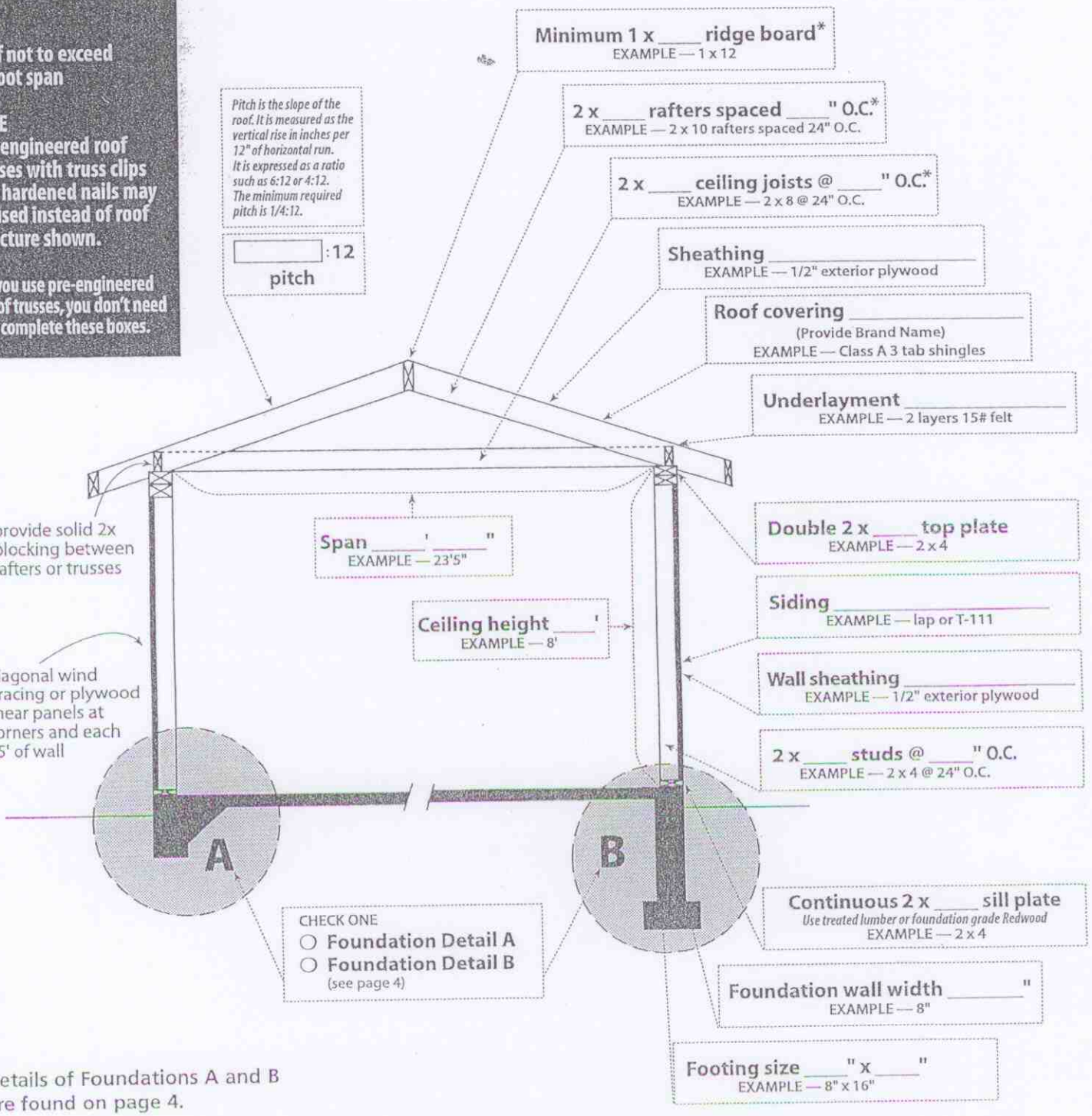

Details of Foundations A and B are found on page 4.

FOUNDATION DETAILS

For detached garages not over 1000 square feet in area

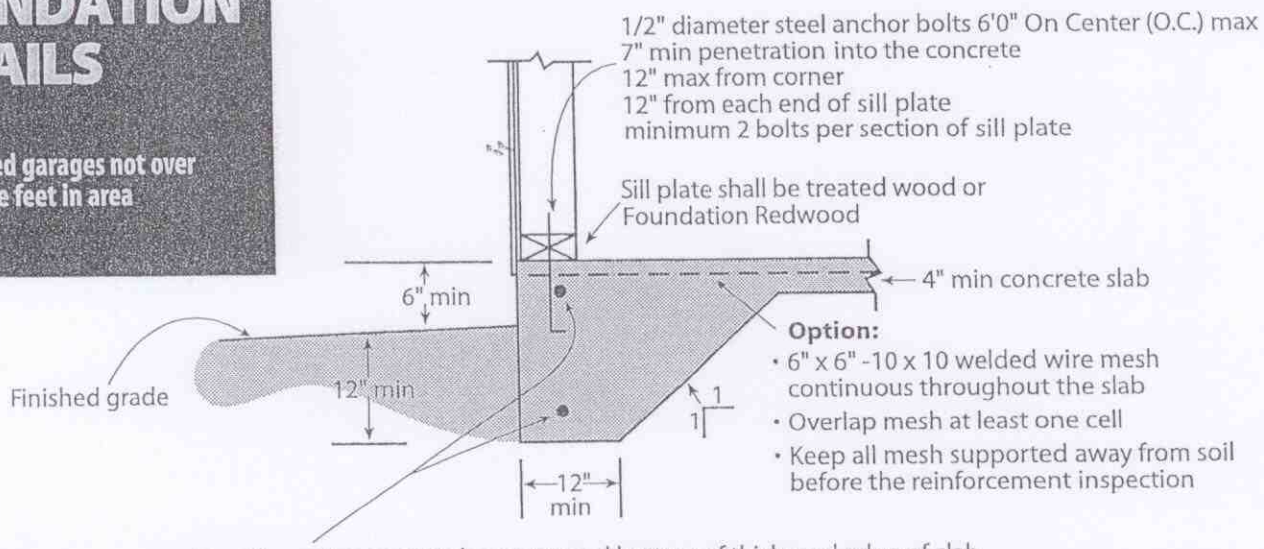

A

Monolithic Slab

- Provide continuous #4 rebar at top and bottom of thickened edge of slab
- Rebar must be kept at least 3" from the soil
- All lapping of rebar is to be a minmum of 15" and all bends are to be cold bends

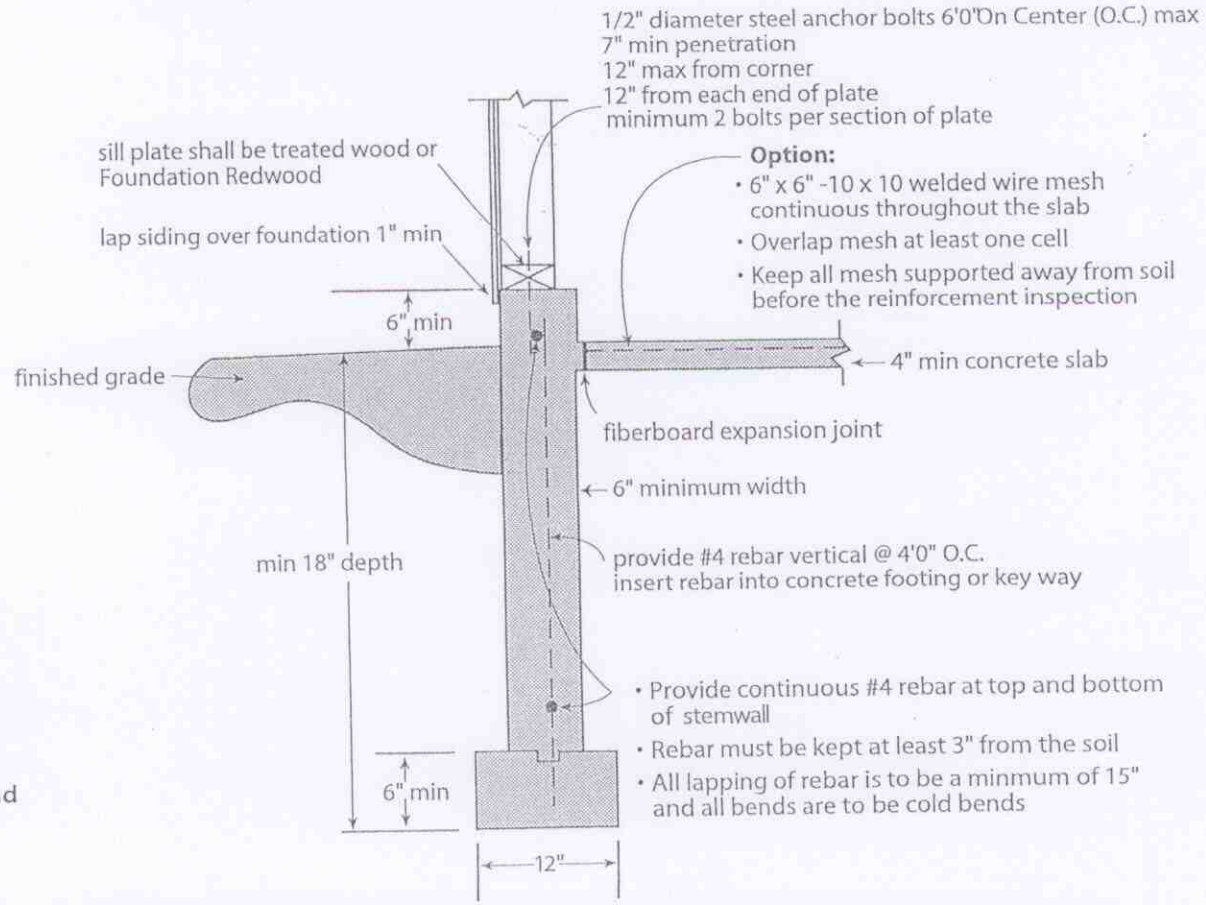

B

Footing and Stem Wall